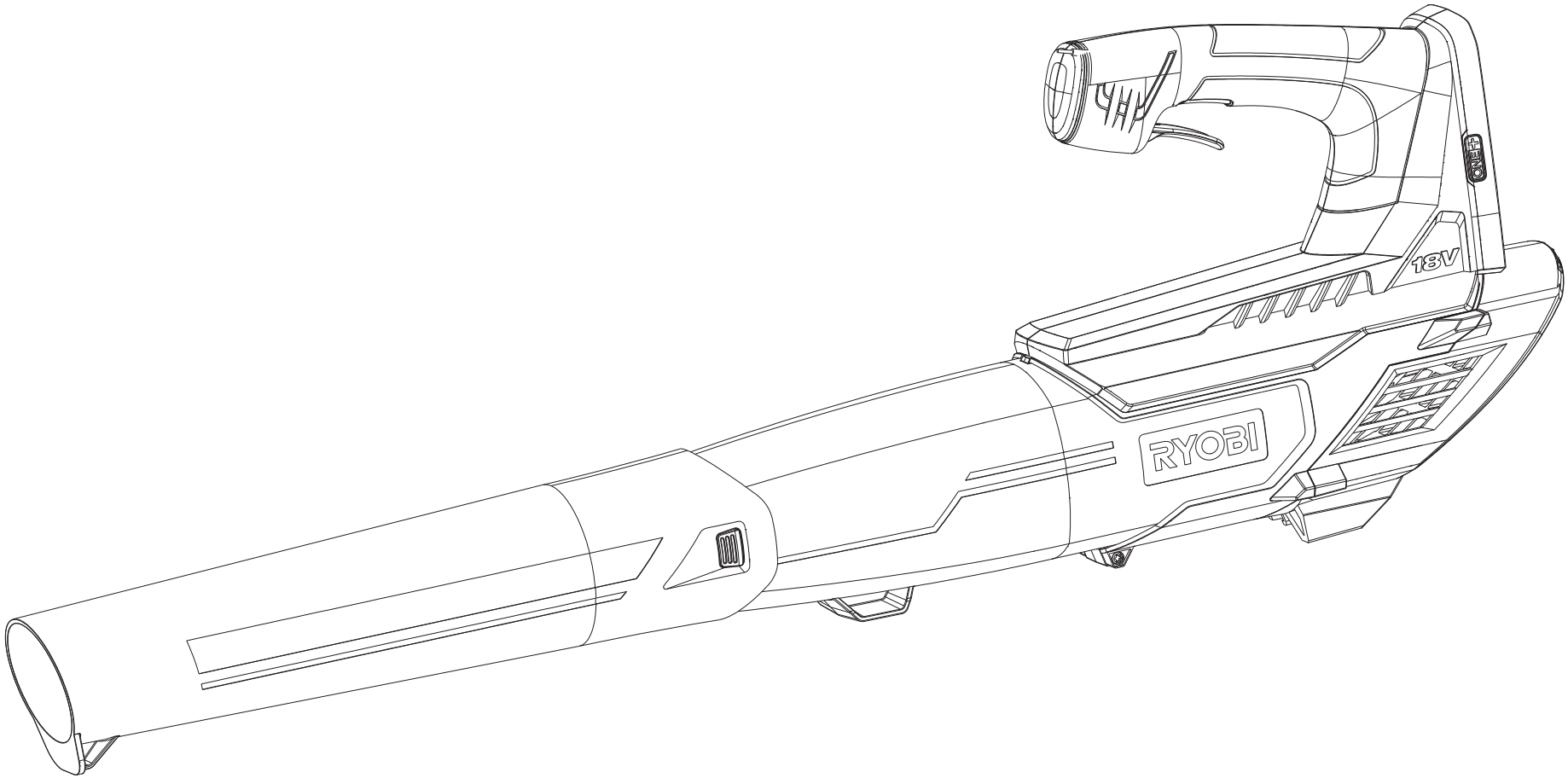

ryobitools.eu

DESIGNED TO DO MORE